# FUNCTIONING DESCRIPTION AND ADJUSTMENT

## KV1P control valve single speed

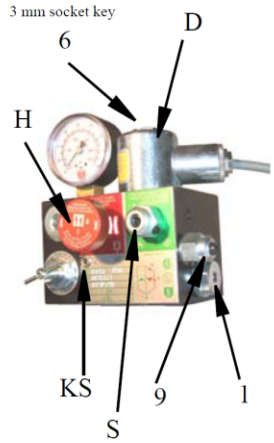


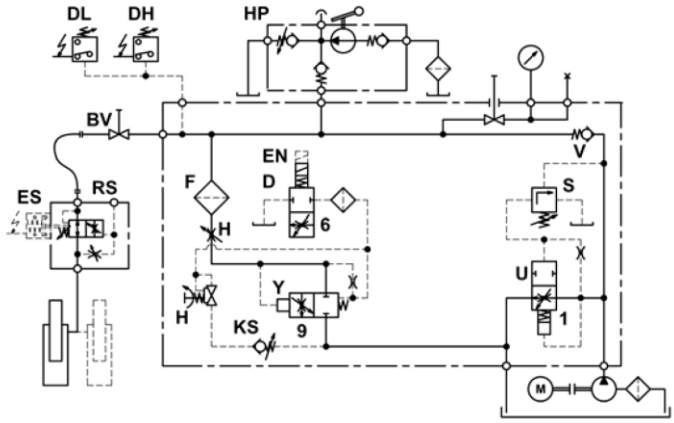


Hydraulic circuit

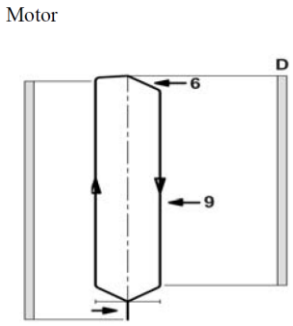


Electrical sequence

## KV1S control valve single speed with soft stop UP

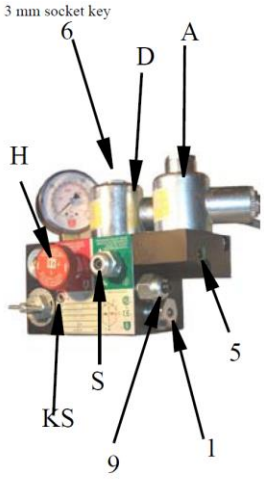


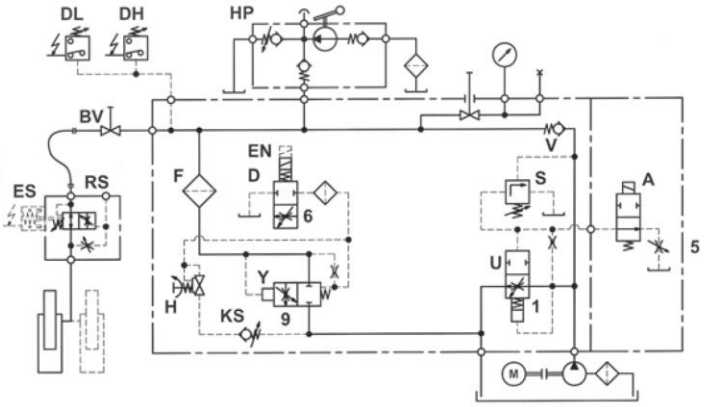


Hydraulic circuit

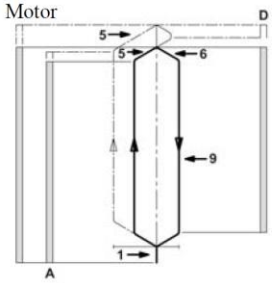


Electrical sequence

## KV2S control valve double speed DOWN and soft stop UP

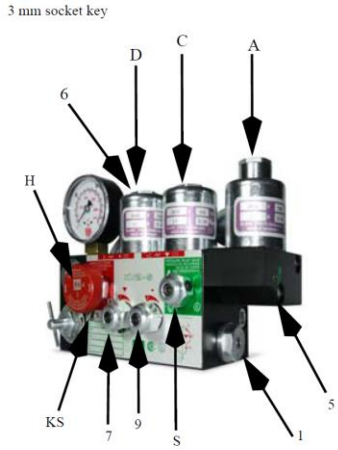


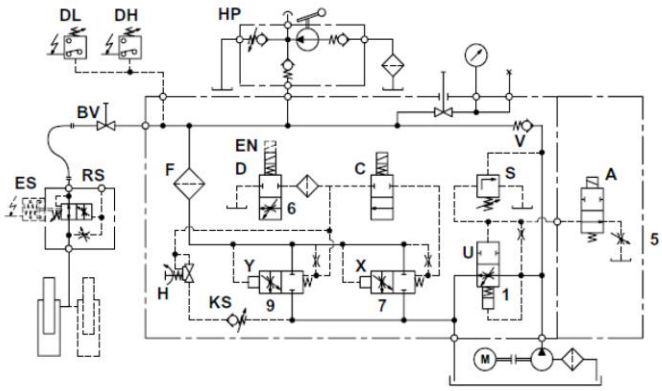


Hydraulic circuit

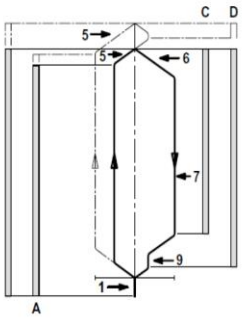


Electrical sequence

| Control elements | Adjustments UP | Adjustments DOWN |
|---|---|---|
| A Solenoid “UP STOP”<br>D Solenoid “DOWN STOP”<br>C Solenoid “DOWN LEVELLING SPEED”<br>U Bypass valve<br>H Manual lowering<br>V Check valve<br>Y Down level valve<br>F Main filter<br>S Relief valve<br>KS Slack rope valve | 1 Bypass<br>5 Up soft stop<br>*Up acceleration built-in* | 6 Down acceleration<br>7 Down high speed (only KV2S)<br>9 Down levelling speed (KV2S)<br>down speed (KV1P and KV1S)<br>*Down deceleration built-in* |

## CONTROL VALVE ADJUSTMENT

**WARNING**: Only qualified personnel should adjust or service valves. Unauthorised manipulation may result in injury, loss of life or damage to equipment. Prior to servicing internal parts, ensure that the electrical power is switched off and residual pressure in the valve is reduced to zero.

**Valves are already tested and adjusted**. Check electrical operation before changing valve settings. Test that the correct solenoid is energized by removing nut and raising solenoid slightly to feel pull.

## ADJUSTMENT UP

**KV1P**

**1 Up Bypass:** when the pump is started, the unloaded car should remain stationary at the floor for a period of about 1 second before starting upwards. The length of this delay is according to the setting of adjustment 1. “in”(clockwise) shorten the delay, “out” (c-clockwise) lengthens the delay.

**S Relief Valve:** “In” (clockwise) produces a higher, “out” (c-clockwise) a lower maximum pressure setting. After turning “out”, open manual lowering H for an instant.

**Important : when testing relief valve, do not close ball valve sharply.**

**only for KV1S and KV2S**

**5 up stop:** “in” (clockwise) provides a softer stop, “out” (c-clockwise) a quicker stop.

## ADJUSTMENT DOWN

**KV1P / KV1S**

**6 Down Acceleration:** “in” (clockwise) provides a softer down acceleration, “out” (c-clock wise) a quicker acceleration.

**9 Down Speed:** “in” (clockwise) provides a slower down speed, “out” (c-clockwise) a faster down speed.

**Only for KV2S**

**7 Down Speed:** “in” (clockwise) provides a slower down speed, “out” (c-clockwise) a faster down speed.

**9 Down Levelling Speed:** “in” (clockwise) provides a slower down levelling speed, “out” (c-clockwise) a faster down levelling speed.

**H Manual Lowering:** “out” (c-clockwise) allows the car to be lowered by hand. Closes automatically on release.

**KS Slack Rope Valve:** turning the screw K “in” for higher pressure and “out” for lower pressure.

## Rupture valve test

Attention: Before test, you should annotate the position of screw in order to fix again the screw in the original position after the test.

An increasing of car speed to down direction is necessary to engage the rupture valve. To increase the down speed you shall act on a screw.

KV1P e KV1S → Screw nr 9
KV2S → Screw nr 7

'In' (clockwise) provides a slower down speed, 'out' (c-clockwise) a faster down speed.

Unscrew the screw until the engage of rupture valve.

After test, reposition the screw as it was originally.

**SOFT STOP**

Soft stop allows the car to stop smoothly in up direction. The car decelerates from nominal speed to stop with an adjustable dumping.
When the car is approaching the floor, the sensor switch fixed in the shaft sends a signal to the control panel to de-energize solenoid A, while the pump must running approx. 1/2 seconds longer to allow the car to stop smoothly according to the setting of screw n5: 'In" (clockwise) provides a softer stop, 'out' (c-clockwise) a quicker stop.

To adjust the screw n°5 follow the instruction below:

1) Fix the sensor switch to de-energize the solenoid A about 100mm below the floor level.
2) With full load, make some travels in order to increase the oil temperature up to 30-40°C
3) Make an upward travel and adjust the screw n5 so the car stops smoothly 5-10 mm below the floor level. If the car stops too early, turn the screw n5 clockwise, if the car stoops too late turn screw n5 c-clockwise. In these conditions (maximum load and hot oil temperature) from the moment that the solenoid A is de-energized, the car should stop in about 0,5-0,7 sec.
4) Remove the load, and make an upward travel with empty cabin. The car should stop at floor or little above.

NOTE: The oil temperature must be higher than 15°C. If necessary, it is possible to install an oil heater inside the tank that maintains the minimum oil temperature at 30°C

Following the instruction written above the valve allows a smooth stop at floor with an accuracy of ±10mm, independent of load- and temperature working conditions.

The soft stop regulation does not effect for the downward travel. The corresponding regulation for the downward travel is: screw n9 for valve KV1P and KV1S, and screws n7 and n9 for valve KV2S.

**KV1S**

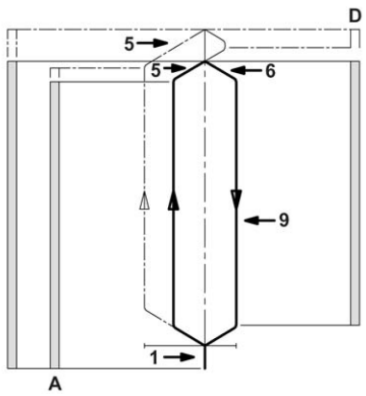


**KV2S**